TECO	OUTLINE DIMENSIONS 3-PHASE INDUCTION MOTOR	FRAME NO : D90-4, 6

POLE	kW	HP	RPM	FRAME
4	1. 10	1. 50	1430	D90S-4
4	1.50	2.00	1430	D90L-4
6	0.75	1.00	940	D90S-6
6	1.10	1. 50	940	D90L-6

Totally Enclosed Fan-Cooled Type. Squirrel-Cage Rotor.

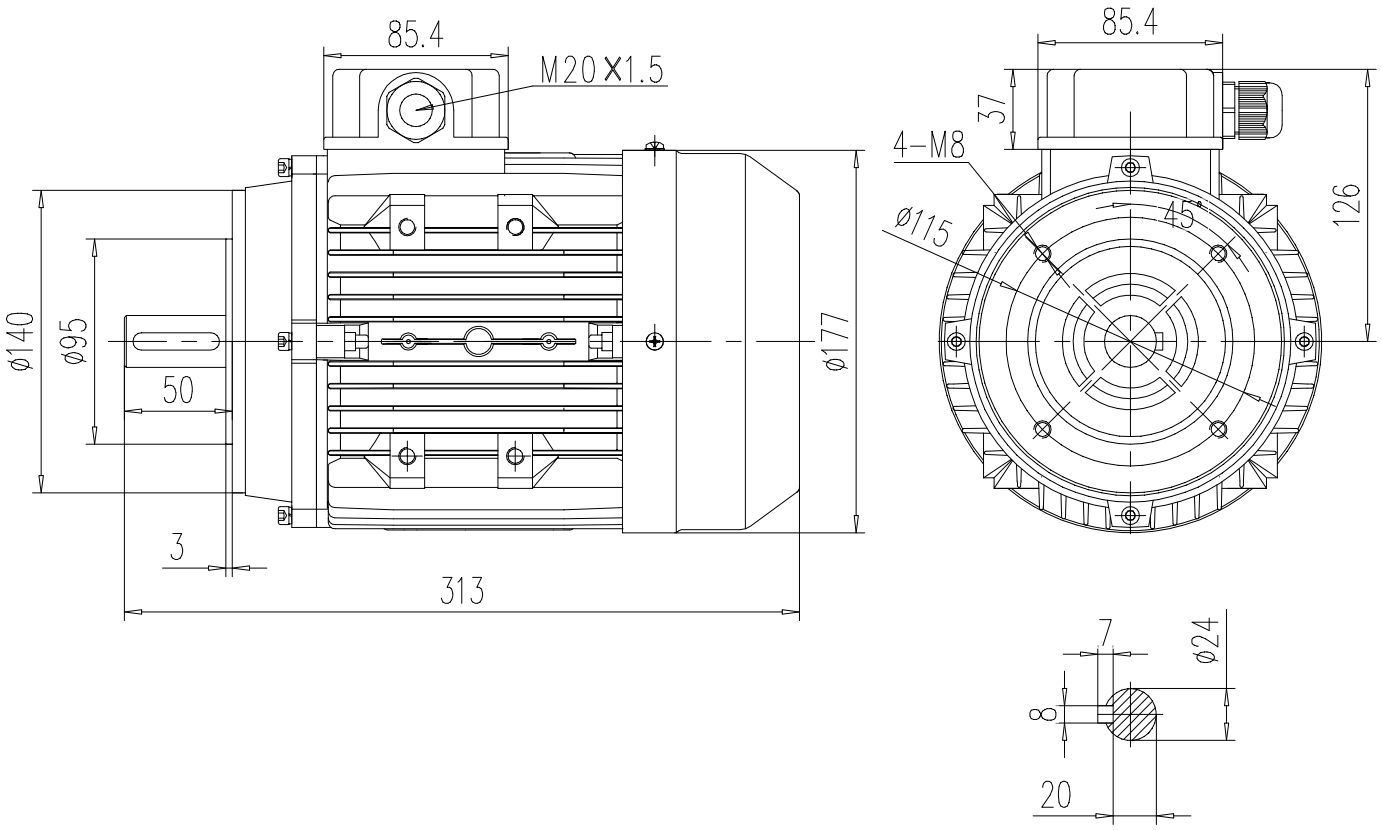

NOTES:

1. DIMENSIONS IN mm.
2. SCALE 1: 3. 5
3. C FLANGE MOUNTED IM3601.
4. FOR DIRECT DRIVE ONLY.
5. IP55 PROTECTION.

MAX ALLOY

DWN.	DP	16. 12. 24	REV : 00
CHKD.	AN	16. 12. 24	
APPD.	JC	16. 12. 24	